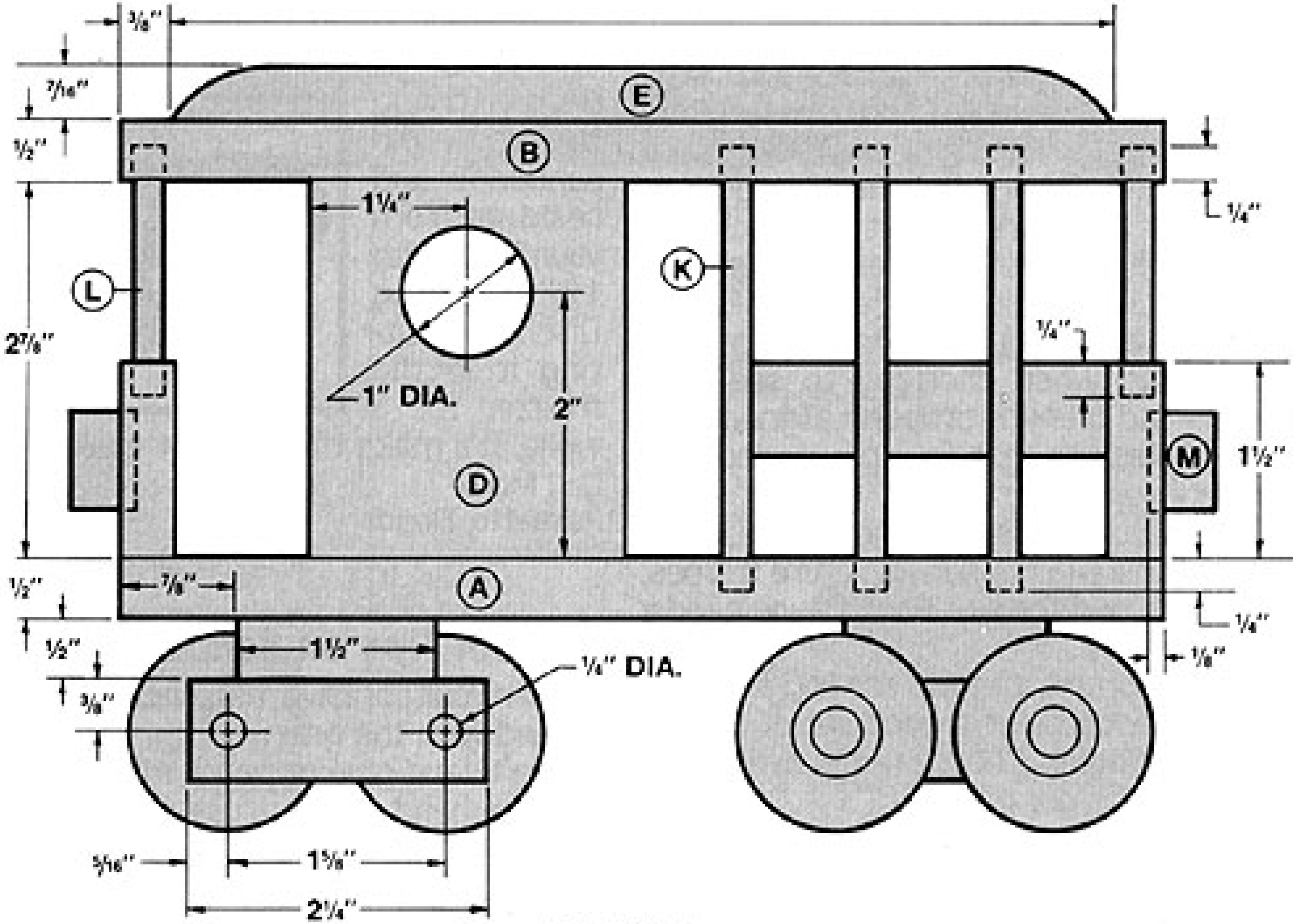
3/8"
7/16"
1/2"
E
B
1¼"
1/4"
K
L
2⅞"
1/4"
1" DIA.
2"
D
M
1½"
1/2"
7/8"
A
1/4"
1/2"
1½"
1/4" DIA.
1/8"
3/8"
5/16"
1⅝"
2¼"

SIDE VIEW